The DNA of Atlas Power Cables and Accessories

April 2013

ATLAS | Cables

Why do we need to consider the use of high-quality power cables?

Traditionally there as always been an assumption that any power cable will be satisfactory for use with a hi-fi or home theatre system provided that it will handle the current drawn and provided that it is electrically safe. As a result it has been quite common to find that users have spent large sums of money to build up a high performance entertainment system with good quality interconnection cables yet have powered the components through the same cables they would use to power an electric kettle or a lap-top computer. Similarly many systems can be found to be plugged into a low-cost distribution board purchased from the nearest supermarket.

There are two problems with this level of “false economy”. First it is the case that you cannot get out of the loudspeaker cables what you cannot take in through the power supply cables. So if you have losses at the mains supply end you will hear equivalent losses at the loudspeaker end. Although we all accept the improvements that good quality inter-connects and speaker cables can bring to our hi-fi and home cinema systems there is far less acceptance of the potential benefits of the changes that can be made on the mains power side of the equipment. Which is odd because the sounds that come from the loudspeakers are generated by the power from the wall socket modified and controlled by the input signal. And even amongst designers who should know better there has been an assumption that the mains supply is near enough a perfect 50Hz sine-wave or at least good enough to do the job. But in practice that supply suffers from a number of problems including nasty interference and radio-frequency signals; transient spikes; an asymmetrical wave-shape with consequent distortion harmonics; an unwanted dc component and fluctuations in level.

It is worth noting that the generator companies generally do an excellent job in providing a supply that is reasonably clean and stable in terms of voltage and frequency. The problems usually starts in the immediate locality of the home and many of these problems are caused by neighbouring users. The street supply is shared so any unusual loads in other buildings will affect the quality of the supply. Unwanted harmonics and interference can be added by old motors (central heating pumps are popular culprits) whilst some appliances draw power in a way that clips the tops off the originally pure sine-wave waveform of the supply.

Probably 99.9% of hi-fi enthusiasts stick with the power cables that came with the equipment and plug the system into the nearest wall socket often via one or two distribution boards purchased at an attractive price from the nearest store. And the system appears to work OK so why make any changes?

Well let’s start with the socket on the wall. In the UK it is likely to be fed from a ring-main which is a power cable which starts at the distribution box (fuse-box) and continues from socket to socket in a daisy chain until the cable arrives back at the

box. The primary advantage of the ring main is that no single outlet can load down the supply to the detriment of an outlet in another room; every outlet gives the same output voltage. The disadvantage of the ring main is that if one appliance, like an old sewing machine or a WiFi router, puts interference onto the mains line then it will appear on each and every socket. Not only are there unwanted “interference” signals on the mains supply but there are also many such signals being transmitted through the air so the shielding of the supply conductors is very important. All the power cables of the system generally go to one set of outlets, and they are usually tied together or laid on top of each other. They also tend to physically crossover the AV interconnects and speaker cables so giving the opportunity for mains borne interference to be injected directly into the audio signal with predictable and undesirable results. So the power cables ideally need to be shielded from each other and from the audio/video cables. As we describe later this is usually achieved by having an outer shield of braided copper wire or foil.

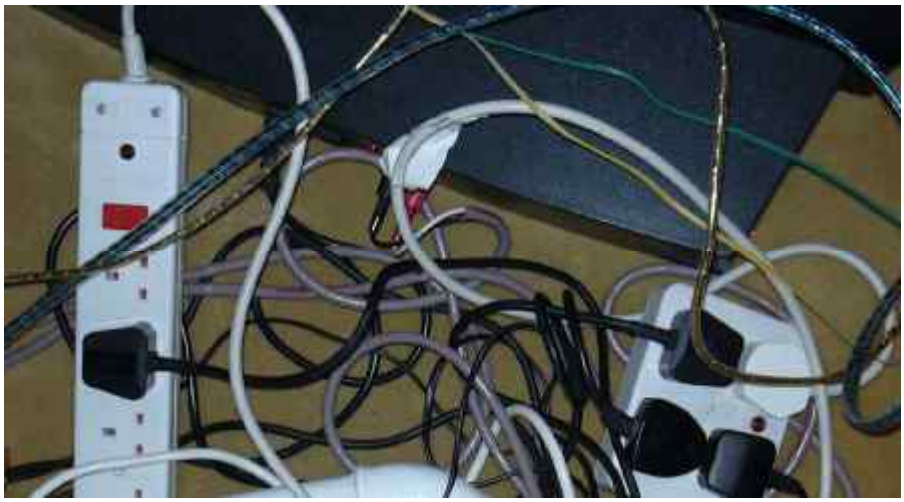

The picture above shows the tangle of cables seen behind many hi-fi systems. A few minutes spent routing the interconnect; loudspeaker and power cables into separate neat groups usually gives immediate benefits to the performance.

Finally the power cable must use thick enough conductors to allow adequate power to flow to your equipment and it needs to make a good connection to both the wall outlet and the product through the use of high quality connectors on both ends.

The incoming Mains Primary Circuit

When audio engineers design power supplies they go to great lengths to keep the internal supply voltages as stable and predictable as possible. In doing so most engineers assume that the incoming supply (230 volts at 50Hz in Europe) will be stable. So you will see amplifiers with very large toroidal power transformers and oversized reservoir capacitors all of which keep the impedance of the supply (its resistance to the follow of electricity) at virtually zero. However there is a constant rule in the design of power supplies; you can only get out what you put in. This doesn’t just refer to the power you can draw it also refers to the circuit losses.

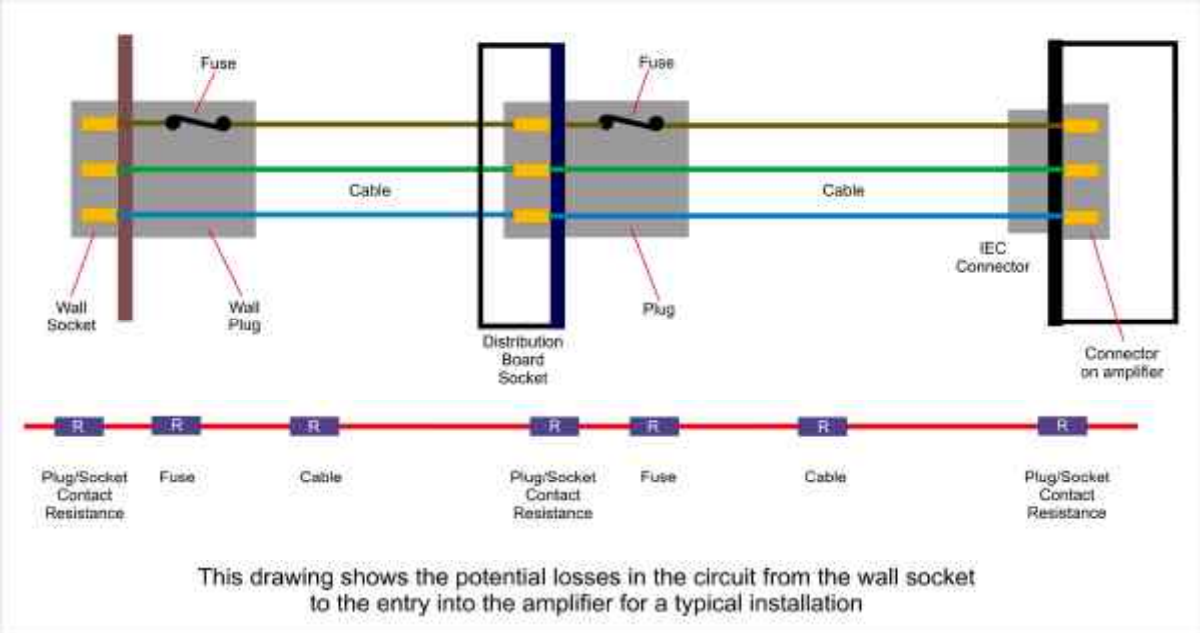

This drawing shows the potential losses in the circuit from the wall socket to the entry into the amplifier for a typical installation

In the primary circuit, the incoming mains supply circuit; there are a number of losses. These include the losses of any cables or wires; the losses through any connections; the losses introduced through fuses or contact breakers and the losses through and filters in the power supply lines. Now these losses may seem small but they do add up and start to have an effect. This can be shown by doing some simple calculations. Imagine we have a typical domestic supply chain to an amplifier comprising the power socket on the wall; the power plug (with perhaps an internal fuse); a length of cable into a distribution board; the internal wiring of the distribution board and its output sockets; the power plug; another length of cable and the IEC type plug and socket. Now for our example imagine that the total end to end impedance is 2.5 ohms and the current drawn by the amplifier varies between almost zero and 6 amps depending upon the music level.

At the peak current level the voltage loss in the primary circuit will be 6 x 2.5 = 15 volts so the supply voltage into the amplifier will drop an appreciable 6.5%.
This loss will also dissipate some power = 6 x 15 = 90 watts. This power dissipation will cause a temperature rise which in turn will cause the resistance of all the copper components and wires to rise. Imagine now that the internal temperature of the copper cables rises from 20 degrees C to 8o degrees. The resistance will increase to 3.1 ohms; the voltage loss to 18.6 volts and the power loss to 112 watts. As more power is dissipated so the temperature will rise causing the vicious circle to continue. Now a voltage drop of under 10% may not seem much but with many amplifier designs it can cause a very audible compression of the sound so such losses must be minimised.

There is a very simple test that can be made to check some of the losses of the primary circuit. Play music at a fairly loud level for an hour or two and then switch the power off and touch accessible items in the primary chain such as the mains power plugs. If they are warm to the touch then you have significant losses because where you have losses you will have power dissipated and when power is dissipated the temperature will rise. So if the power plug is hot to the touch you will reveal very serious loss problems which need to be addressed.

Mains Power Connectors

Most people pay little attention to the mains power connections for after all a plug is a plug is a plug. However even though they all meet the electrical safety standards they do vary considerably in the quality of the metal conductors used; the design and effectiveness of the clamping of the wires to the conducting pins and in the design and effectiveness of the mating between the pins and the contacts inside the matching socket. Many low cost UK style power plugs and sockets (13A fused style) have a contact area totalling less than 0.5 cm² yet these will be found in many designs of distribution boards which handle high levels of current. It should also be remembered that the supply voltage may pass through a fuse link built into the power plug so this component should also be of the highest quality and designed to ensure a clean low-loss connection within the plug. The Atlas fuse link has fine silver plated end-caps in place of the usual low-cost; low-performance tin-plated components and when used in Atlas plug-tops it ensures a very good connection.

The UK 13 Amp 230 volt power plug and the IEC power plug are typical of the Atlas range and feature copper bronze pins which are highly polished then plated with 1.25 microns of pure Rhodium; a micro finish which ensures an excellent connection and hence better overall performance. The care in design extends to the substantial bodies which are precision moulded in heavy duty Polycarbonate.

What factors does Atlas consider in its cable design?

In designing power cables Atlas always consider five key things. These are; the quality of the conductors; the quality of the insulation; the effectiveness of the shielding; the quality of the connectors or plugs and finally the durability and safety of the finished product.

For the EOS power cables Atlas uses Oxygen Free Copper (OFC) conductors which have a high purity and therefore do not degrade with time. The insulation material is “Teflon” a form of PTFE which not only provides excellent insulation way beyond the required standard but also shows virtually no degradation over tens of years use.

Atlas uses the best connectors currently available as can be seen in the pictures above. Power Plugs are available for the IEC connector; the Schuko style 220v plug; the Nema 110v plug; and the UK style 13A 230v plug with a silver fuse link.

The function & design of cable shielding and screening

The home of today is flooded by electromagnetic waves; radio frequencies of numerous kinds from short transients created by machinery and burst transmitters such as is used for radar and Police transmissions to the Wi-Fi and Bluetooth wireless system used throughout most homes. Although we cannot hear this interference directly it does have effects that can severely degrade the quality of the audio signal we are listening to. Many of the circuit components used at audio frequencies do behave as resistors, capacitors and inductors. But at higher RF frequencies the so-called “parasitic” properties of many components come to dominate and some capacitors turn into inductors; some inductors turn out to behave as capacitors and so on. Furthermore such RF frequencies and fast interference spikes can be transmitted across circuit board without any need for direct wires so they are very difficult to control. If such interference enters, say, an amplifier it can get into the sensitive stages through an input; a feedback connection or a power supply line and be able to overload the input transistor stage and cause it to “latch” for a time. During that time and any additional time it takes for the amplifier to recover it will not be operating correctly and the sound quality will be severely degraded although not in a way that is easy to describe. Indeed in even worse cases the interference signals can cause the amplifier to oscillate with the risk of damage and a long-term loss of performance. And this can often be happening without the listener becoming aware of a specific problem.

RF and interference signals can be reduced by adding screening or shielding the complete cable. A cable shield may be composed of braided strands of a metal such as copper or a non-braided spiral winding of copper tape, or a layer of conducting polymer; a metal foil which is bonded to a plastic film. This is the type of shielding used for Atlas EOS power cables and the shield acts as a Faraday cage so that any electrical signals on the outside of the cage will not be present on the inside of the cage. The shield works by shunting electromagnetic energy (the RF or interference

signal) to the ground. To do this effectively a shield needs to cover the conductors completely, so that RF energy cannot readily pass through any holes in the shield; it must have good conductivity so that energy can be easily conducted to the ground; and naturally there must be a good connection to the ground at the end of the cable.

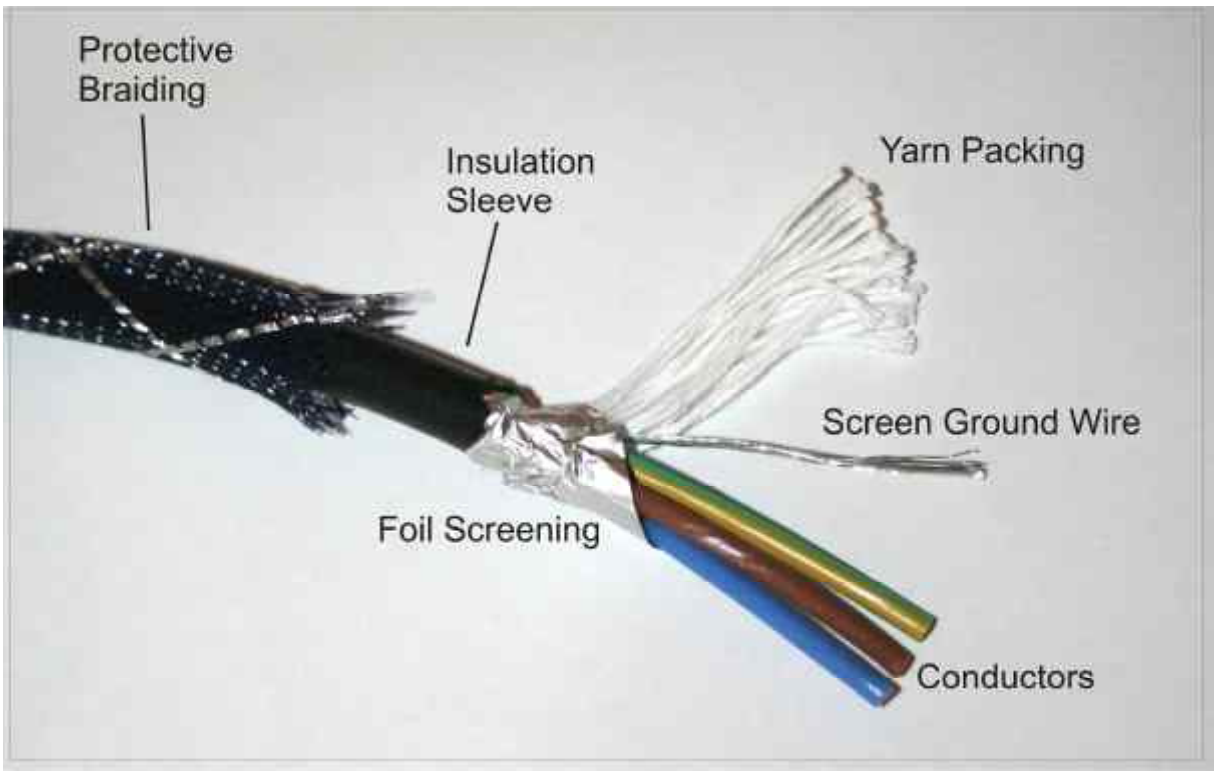

Why all the power cables should be upgraded

So far we have explained that a high-performance power cable should allow the electrical current to be delivered to the equipment; be it an amplifier or a DVD player; with the minimum of electrical losses and with the minimum pickup of any unwanted signals which could distort or colour the sound. Yet sometimes users, for perfectly understandable reasons, may chose to change just some of the cables in a system and then find that the improvements are not as clear as were expected. But RF and interference signals will always find their way into an electronic system if they are given an entry point and once inside they can pass freely from unit to unit because there is nothing to impede their progress. The only way to avoid the audible degradation they bring is to deny them an entry into the system and that means shielding every single power cable.

ATLAS | Cables

Power Distribution for your Hi-Fi system

In an ideal world the best way to connect a hi-fi system to the electrical power supply would be to provide an output socket on the wall for each individual piece of equipment; each socket being directly wired into the ring main supply or wired on a direct spur to the consumer distribution unit where the mains power enters the home. However with many systems needing, say 8 to 12 outlets, this is too big a step for most people and can often require expensive re-wiring of the home. So in practice most people use distribution boards and because such products all look much the same most people finish up using relatively inexpensive boards bought at the local supermarket.

But the use of such boards can degrade the performance of a good hi-fi system and will certainly undo all the benefits of using good quality power cables. By contrast a well designed distribution board, such as those made by Atlas Cables, will use high quality output sockets which ensure a low-loss connection with the matching power plugs. The Atlas boards also use high purity conductors such as OFC covered by highly stable insulators such as PTFE. They also include a means of suppressing high voltage spikes or surges which can easily damage very expensive equipment. This is best done using super-fast acting MOVs (Metal Oxide Varistors) which act as a virtual short circuit when the mains voltage reaches a particular level; typically 260 volts. Atlas Distribution Boards fulfil both these requirements but they offer something more and that is Star wiring.

The picture below shows the wiring of a typical distribution board and all the output sockets are wired in a “daisy chain”; that is each wire goes from one socket to the next and so on.

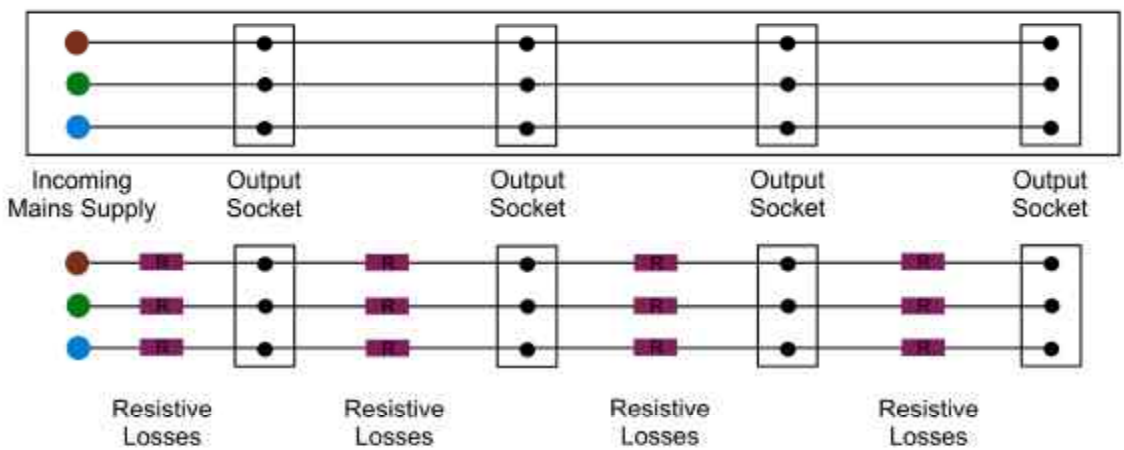

Diagram showing the conventional “Daisy Chain” wiring of a Distribution Board and how the resistive losses all add together in series
Loop resistance to Outlet 4 is 8R ohms

This means that the current being drawn by every unit in the system passes down the same conductors so there will be a small but definite effect upon, say, a CD player when an adjacent amplifier starts drawing large currents. Furthermore noise on the supply can move easily from unit to unit.

By contrast the star-wiring arrangement used by Atlas Cables and shown below connects every unit back to a “star-node” where the supply cable enters the distribution board. The benefits of this arrangement can be measured and, more importantly, heard.

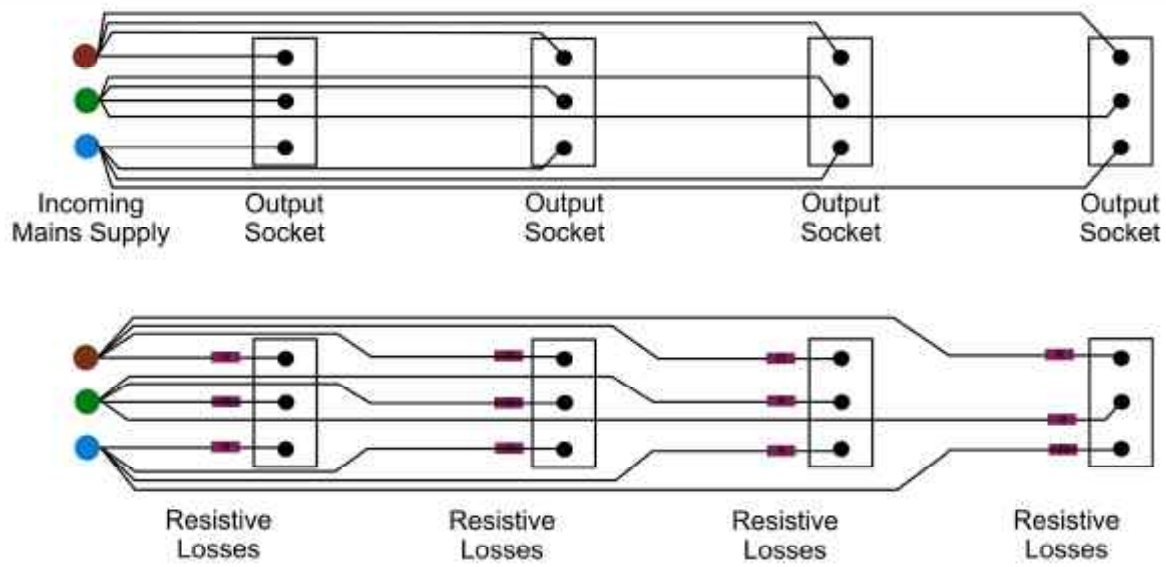

Diagram showing the Atlas Cables’ “Star” wiring of a Distribution Board and how the resistive losses are now in parallel and so reduced Loop resistance to Outlet 4 is reduced from 8R ohms to 2R ohms

Another thing to remember with distribution boards is never use a board which has a neon indicator. The light you see is caused by the breakdown of the neon gas; a breakdown which creates a mass of high-frequency energy which will find its way into your audio circuits.
Although the extensive shielding and good grounding performance of Atlas Eos power cables does avoid RF and other interference signals getting into the supply it cannot remove any such signals which are already mixed into the mains supply. For this reason the Atlas 4-way Power Block is also offered with a built-in low-loss RF filter of very advanced design which has been designed to filter out the interference and RF whilst adding minimal increase in the impedance to the supply lines.

Protection from High Voltage Spikes on the Mains Supply

Voltage spikes on the mains supply are commonly caused by users who switch high electrical loads such as those drawn by machinery, lift motors, welders, fluorescent lights, fridges, and so on. When the mains power-supply voltage nears the peak of its sine wave the actual peak instantaneous voltage is 325V. Now if a piece of equipment is then switched on or off there will be a brief inductive spike of several hundred volts on top of that sine-wave crest so the peak voltage might be 650 volts or so. The spike might not last for long but even when of short duration it could do a lot of damage to a high performance hi-fi system. Such a voltage spike would be enough to degrade the performance of many transistors and although they would continue to work they would never again work to their original specification. Even worse nearby lightning strikes can create spikes of several thousands of volts peak amplitude.

Our solution is to incorporate a device which will limit or clip the incoming voltage to a safe maximum. Such devices are called Voltage Suppressors or Varistors and they are wired between the Live and Neutral lines. Whilst the voltage across them remains below a defined figure they have no impact upon the operation of the system but when that defined voltage is exceeded they break down, to dissipate the unwanted energy. If the over-voltage is high it will usually destroy the device, so Varistors can sometimes be a one-shot insurance policy although most of the time they simply "clip" the voltage to remove any voltage spikes on the power lines.

In Summary

In many ways it is fair to say that much of the investment in a high quality hi-fi system is potentially wasted if attention is not paid to the quality of the mains supply it is powered from. The supply must be clean and free from any noise; interference and radio signals all of which can degrade the performance of the system and, in the worse cases, cause permanent damage to the system. To get the best results from a hi-fi system the user should follow some simple rules to ensure that the supply feed (the sockets on the wall) will be adequate then it is essential to wire each and every product through a high quality power cable such as the Atlas EOS cable and, where a means of power distribution is required, only to use a matched and purpose designed product such as the **Atlas Eos Modular Distribution Board**.

But remember. Noise; spikes; and RF signals can find dozens of entry points into a system so care must be taken to correctly cable the system throughout. The use of an inadequate power cable into one piece of equipment could turn out to be the one place where the degrading signals enter the system.